Mueller Line Stop Specifications

¾” to 1” Mueller Line Stops	
Maximum Pressure	150 PSI/10 bar @ 100°F/38°C
Maximum Temperature	180°F/82°C

1 ½” to 2 ½” Mueller Line Stops	
Maximum Pressure	250 PSI/17 bar @ 100°F/38°C
Maximum Temperature	225°F/107°C

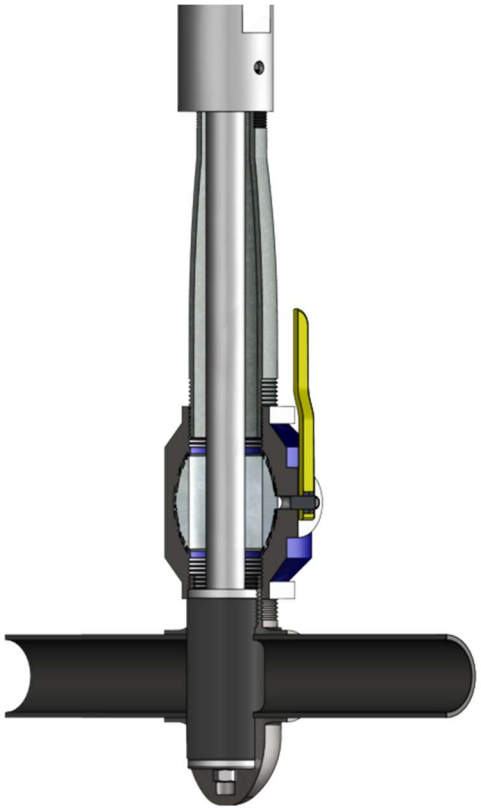

NOTE: EQUIPMENT AVAILABILITY MUST BE VERIFIED BEFORE THE START OF THE JOB.

NOTE: ALL WEIGHTS AND DIMENSIONS ARE BASED ON AVAILABLE DATA AND SUBJECT TO CHANGE.

Machine	Est. Weight	A	B	C	D	E	Mueller Size
IP-100 18”	50 LBS	47”	6”	4”	1 ¼”	58 ¼”	¾” to 1”
IP-100 24”	65 LBS	59”				70 ¼”	
IP-100 28”	75 LBS	67”				78 ¼”	
IP-100 30”	85 LBS	71”				82 ¼”	
IP-100 36”	95 LBS	80”				91 ¼”	

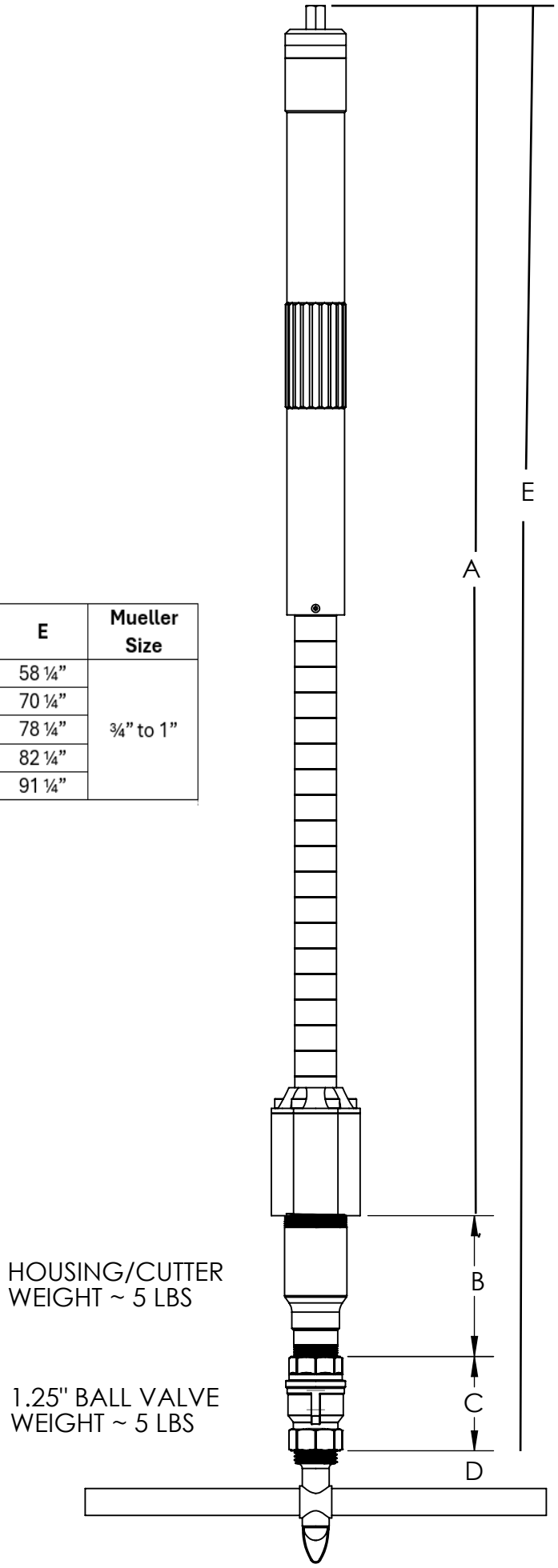

3/4" AND 1" MUELLER LINE STOP

NOTE: EQUIPMENT AVAILABILITY MUST BE VERIFIED BEFORE THE START OF THE JOB.

NOTE: ALL WEIGHTS AND DIMENSIONS ARE BASED ON AVAILABLE DATA AND SUBJECT TO CHANGE.

Machine	Est. Weight	A	B	C	D	E	Mueller Size
IP-100 18”	50 LBS	47”	10”	7”	2 ¾”	66 ¾”	2”
IP-100 24”	65 LBS	59”				78 ¾”	
IP-100 28”	75 LBS	67”				86 ¾”	
IP-100 30”	85 LBS	71”				90 ¾”	
IP-100 36”	95 LBS	80”				99 ¾”	

Machine	Est. Weight	A	B	C	D	E	Mueller Size
IP-100 18”	50 LBS	47”	11”	8”	4 ¼”	70 ¼”	2 ½”
IP-100 24”	65 LBS	59”				82 ¼”	
IP-100 28”	75 LBS	67”				90 ¼”	
IP-100 30”	85 LBS	71”				94 ¼”	
IP-100 36”	95 LBS	80”				103 ¼”	

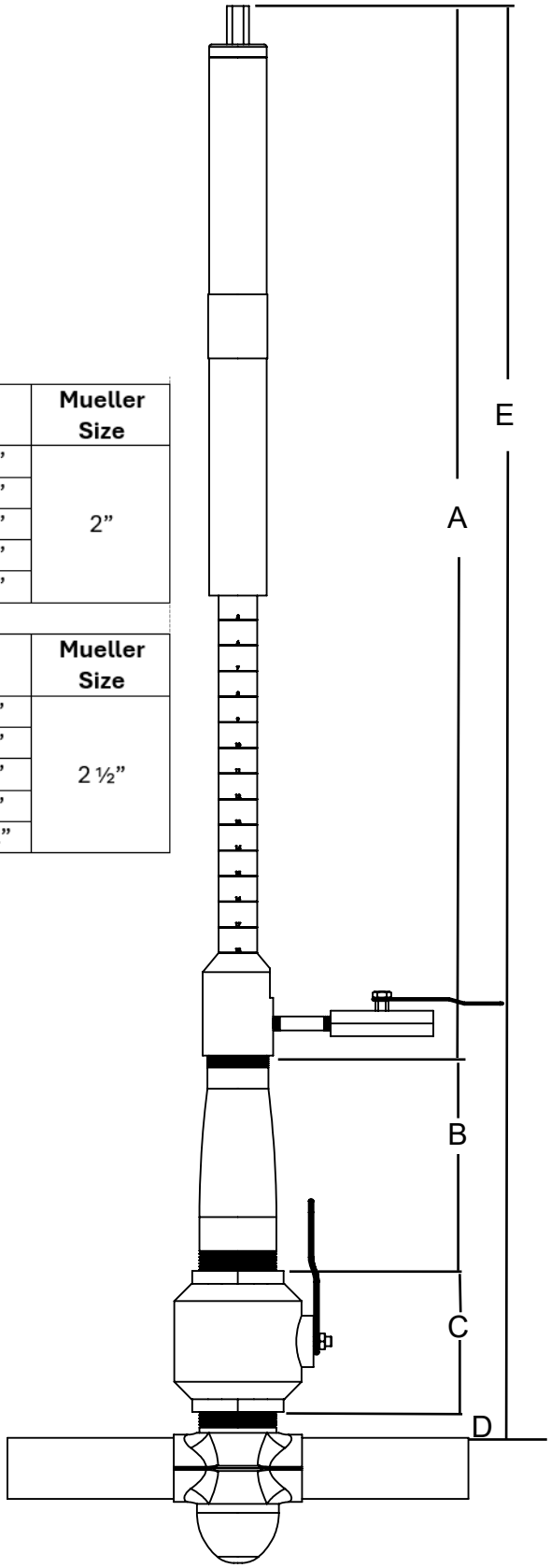

HOUSING AND CUTTER WEIGHT ~ 5 LBS

LINE STOP VALVE WEIGHT
1 1/2" -2" Mueller 15 LBS
2 1/2" Mueller 27 LBS

2" and 2 1/2" MUELLER LINE STOP